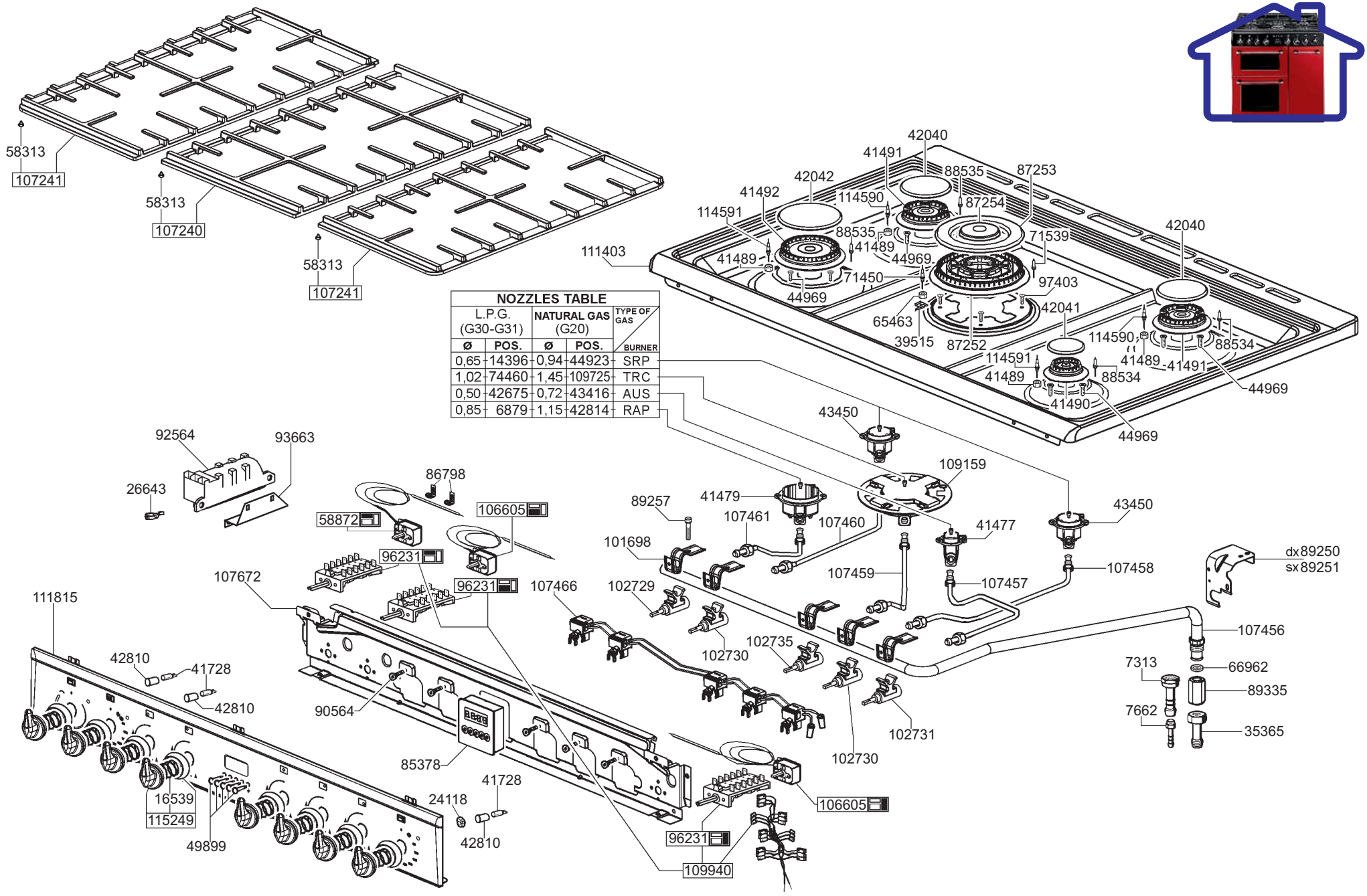


| NOZZLES TABLE | | | | |
|---|---|---|---|---|
| L.P.G. (G30-G31) | | NATURAL GAS (G20) | | TYPE OF GAS / BURNER |
| Ø | POS. | Ø | POS. | |
| 0,65 | 14396 | 0,94 | 44923 | SRP |
| 1,02 | 74460 | 1,45 | 109725 | TRC |
| 0,50 | 42675 | 0,72 | 43416 | AUS |
| 0,85 | 6879 | 1,15 | 42814 | RAP |

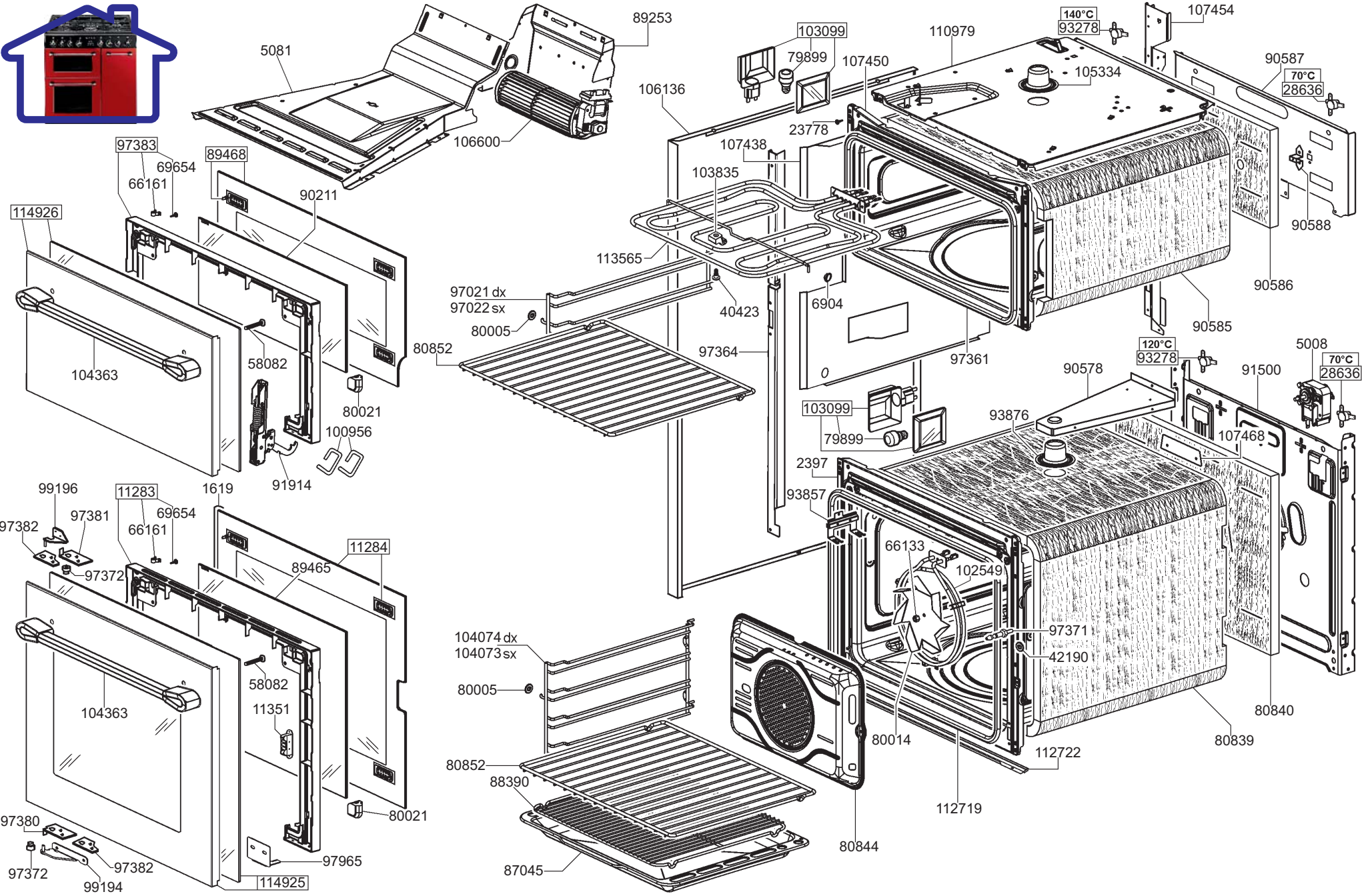
89253
5081
106600
103099
79899
107450
110979
140°C
93278
107454
105334
90587
70°C
28636
106136
23778
107438
103835
97383
69654
66161
89468
90211
114926
113565
90588
90586
97021 dx
97022 sx
40423
6904
90585
80005
80852
97364
97361
58082
104363
80021
100956
91914
120°C
93278
5008
70°C
28636
90578
91500
103099
93876
107468
79899
2397
93857
99196
11283
1619
97381
69654
97382
66133
66161
11284
97372
89465
102549
104074 dx
104073 sx
97371
42190
58082
80005
11351
104363
80840
80014
80839
112722
80852
88390
112719
80021
97380
97965
80844
97372
97382
87045
99194
114925

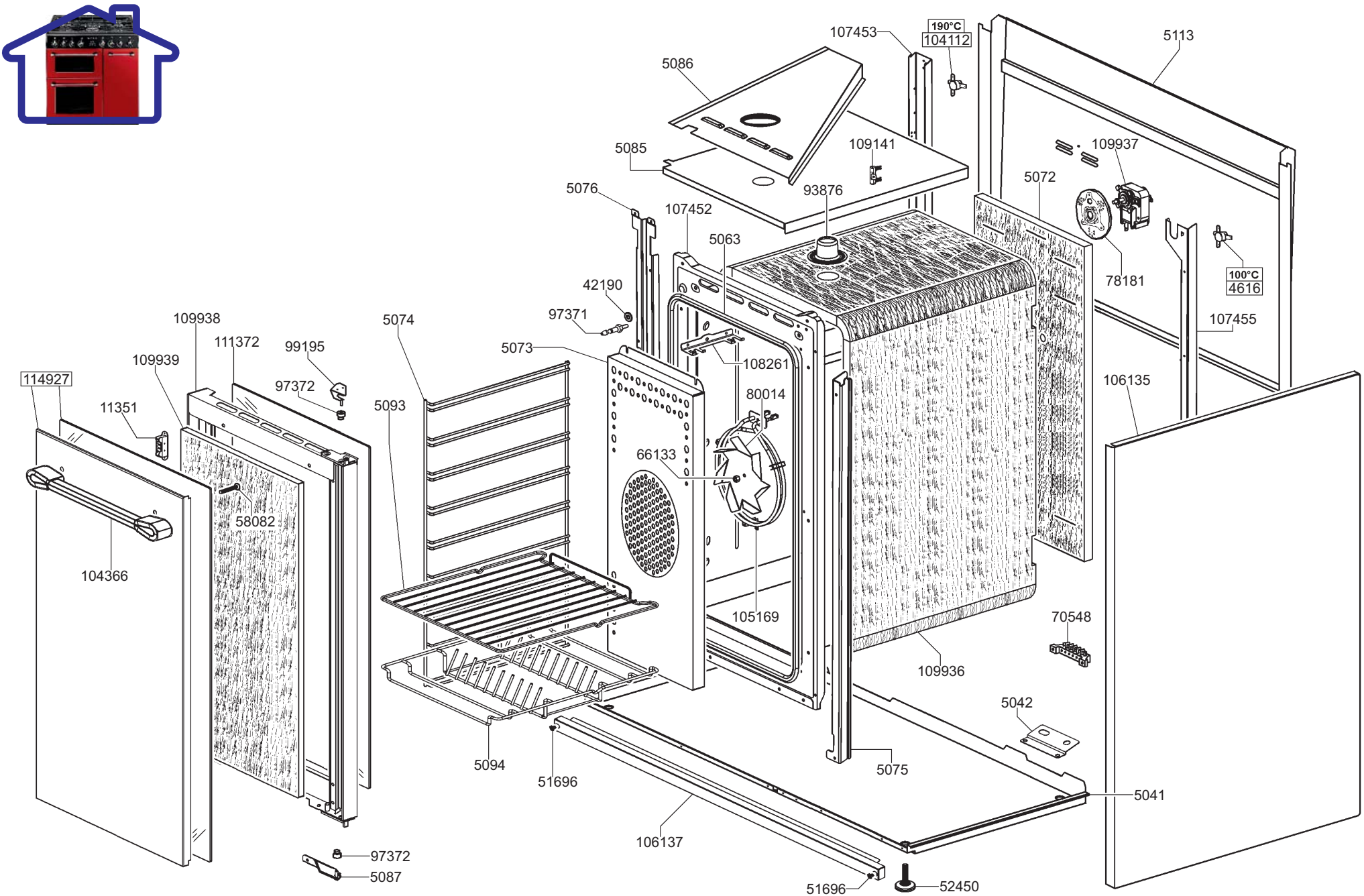
107453
190°C
104112
5113
5086
109141
109937
5085
5072
5076
93876
107452
5063
78181
100°C
4616
42190
97371
107455
109938
5074
111372
99195
5073
108261
109939
97372
106135
114927
80014
11351
5093
66133
58082
104366
105169
70548
109936
5042
5094
51696
5075
5041
106137
97372
5087
51696
52450